Electrolux PROFESSIONAL

Cooking accessories
Trolley with lifting and removable tank

ITEM #

MODEL #

NAME #

SIS #

AIA #

922403 (TRBR) Trolley with lifting & removable tank

Short Form Specification

Item No.

Constructed entirely in 304 AISI stainless steel. The removable 2/1GN tank can be raised or lowered, by means of a manual mechanism and can be adjusted in height to suit the tilting of the bratt pan. 4 swivelling castors, all with brakes.

APPROVAL:

Main Features

- Entirely constructed in 304 AISI stainless steel.
- The removable 2/1GN tank can be raised or lowered, by means of a manual mechanism and can be adjusted in height to suit the tilting of the bratt pan.
- Delivered with 4 swivelling castors, all with brakes.

Cooking accessories
Trolley with lifting and removable tank

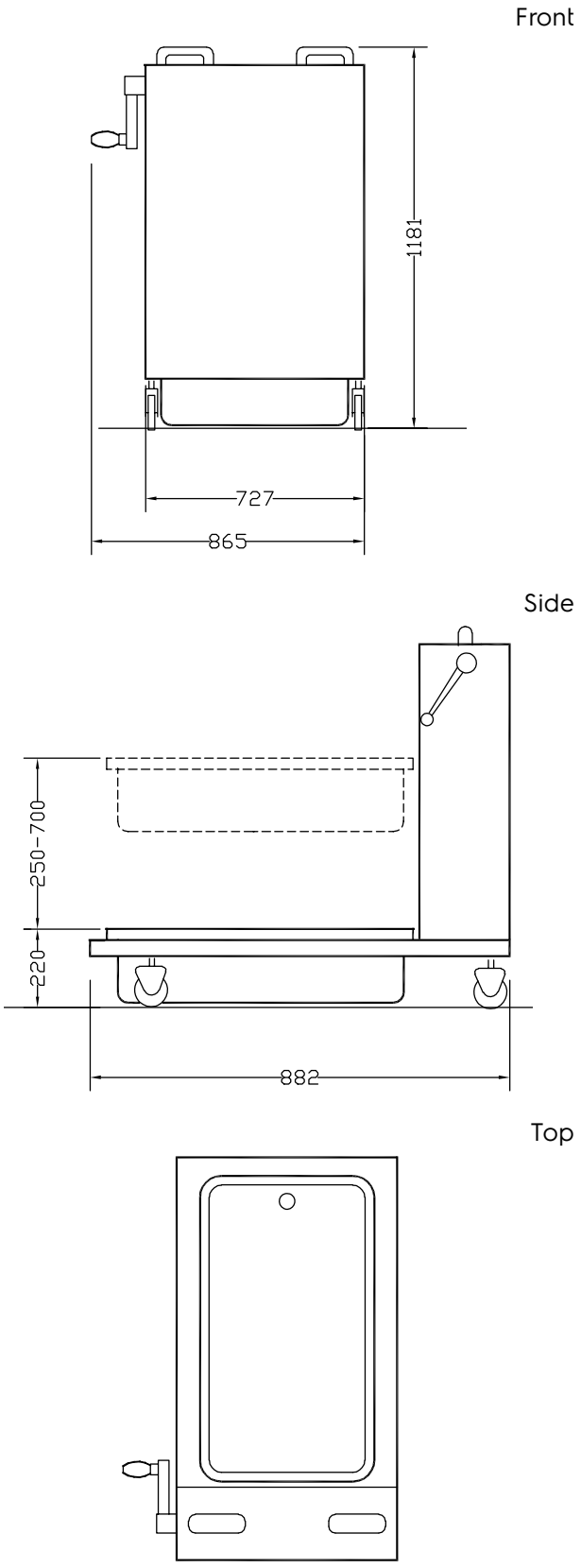

Key Information:

External dimensions, Width:	
922403 (TRBR)	727 mm
External dimensions, Depth:	882 mm
External dimensions, Height:	1181 mm
Net weight:	50 kg

The company reserves the right to make modifications to the products without prior notice. All information correct at time of printing.

2024.10.06